ARLISS-K

3“ 1-can ARLISS rocket plan
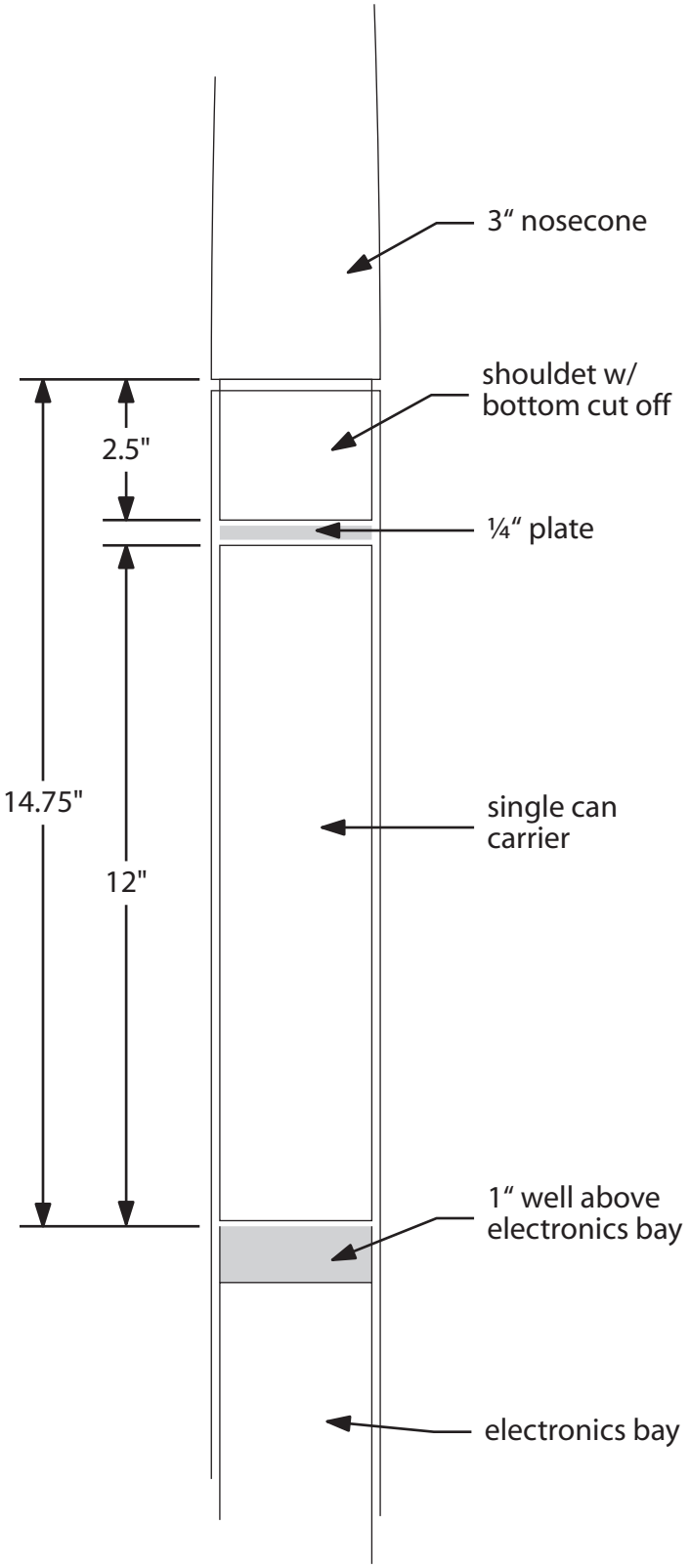
John Coker
john@jcsw.com